SPARK R&D
The splitboard binding company.

MADE IN THE USA

SPARK PUCKS

Instructions and Setup Guide

Spark R&D will not be held liable for product damage due to user error. Read all instructions before beginning!

Compatibility:

Compatible with all splitboards using the industry standard splitboard insert pattern: Puck inserts spaced 3.3” (85mm) across the width of the board and 1” (25.4mm) along the length of the board. For use with all puck compatible splitboard bindings.

Not compatible with channel style splitboards or DIY splitboards (without the industry standard splitboard insert pattern).

Included Parts

2x Toeside Pucks

2x Heelside Pucks

1x Full Alignment tool
1x Mini Alignment tool

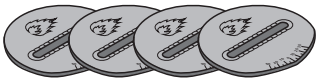

4x Aluminum center disks

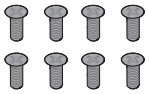

8x M6x16mm Flathead screws

Industry standard splitboard insert pattern

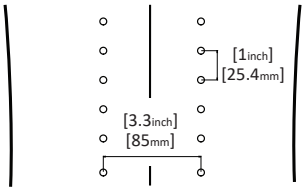

Required Tools

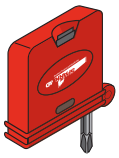

#3 Phillips head screwdriver (found in your spark tool)

Setup Instructions

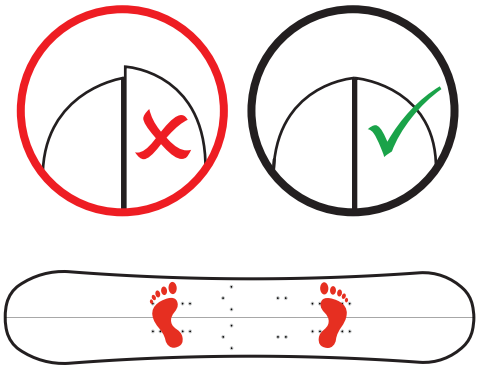

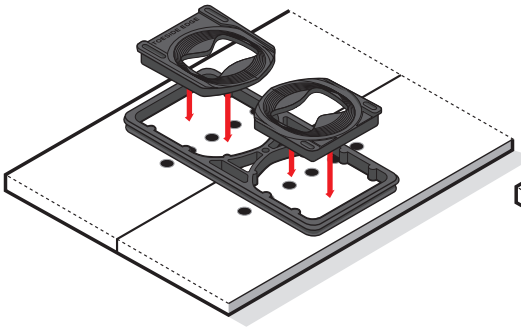

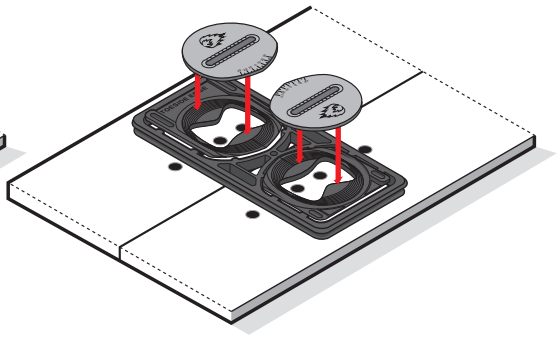

STEP 1

Assemble your split in ride mode. Ensure the tip and tail of your board are perfectly aligned.

Stand on your board and decide where you want your feet. Mark a dot where the center of each foot will be on the board seam.

STEP 2

Place the full alignment tool on the board. Insert a toeside puck and a heelside puck into the alignment tool.

Locate the tool over the center mark of one of your feet.

STEP 3

Drop an aluminum center disk into each of the pucks. Degree indicator marks should point toward the center line of the board. Rotate so you can see the board inserts through the slot in the disk.

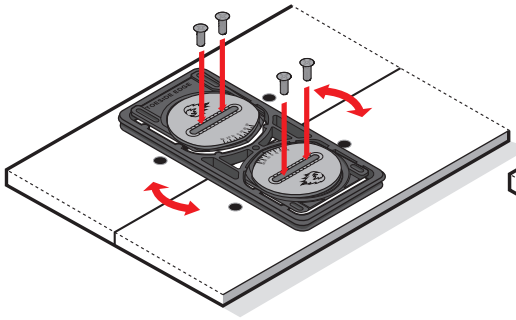

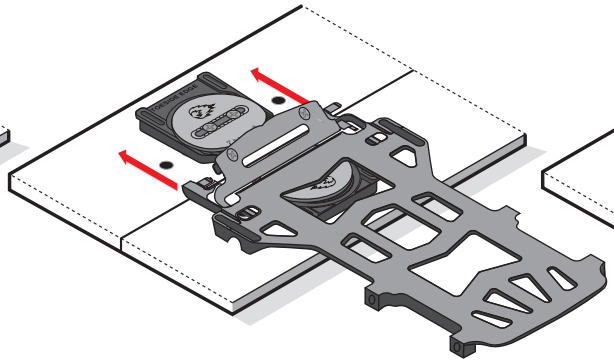

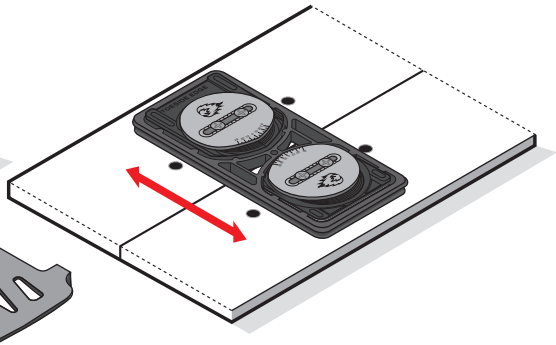

STEP 4

Insert two M6 screws through each disk into the inserts in the board. Tighten a few turns with a screwdriver and then rotate pucks to preferred angle.

Once pucks are in the desired location tighten the screws.

STEP 5

Remove the alignment tool, slide your bindings onto the pucks, and secure with snap ramp or pin. If you’re unable to secure your bindings loosen the screws, nudge in the toeside puck and retighten the screws.

STEP 6

Strap your boots into your bindings and check the heel toe centering. To adjust centering replace the alignment tool, loosen the screws, and slide pucks toward toe or heel edge. Tighten screws, remove the tool, and check centering again.

Repeat for other foot.

Alternate Setup

Mini tool setup for Arc, Magneto, Burton Hitchhiker, and Nitro Vertical bindings.

Alternate Setup Instructions

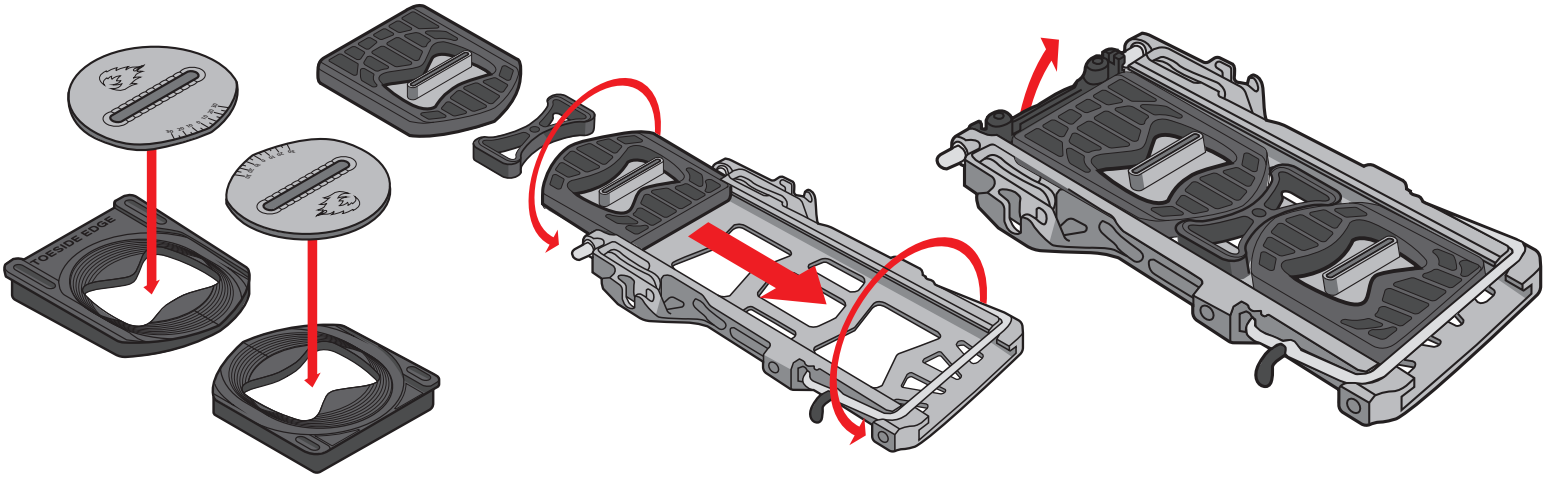

STEP 1

Insert an aluminum center disk into each puck with the degree indicators pointing toward the pointed end of the puck.

STEP 2

Turn your binding upside down and slide the heelside puck into the channel. Set the mini tool into the binding channel. Slide the toeside puck into the channel.

STEP 3

Snap down the ramp or slide the pin into your bindings to secure the pucks.

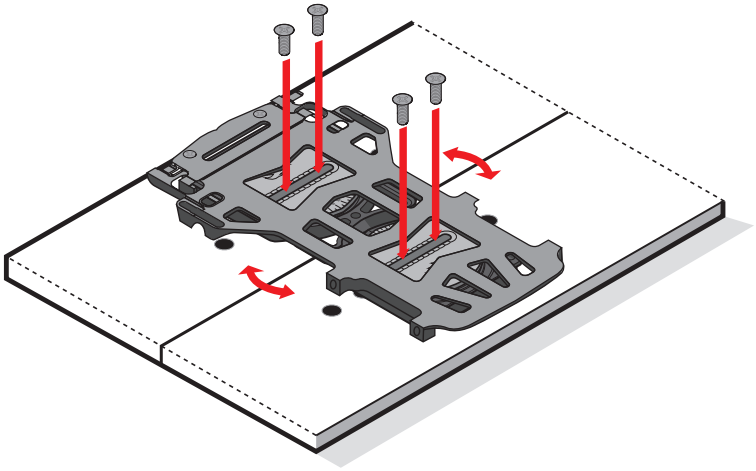

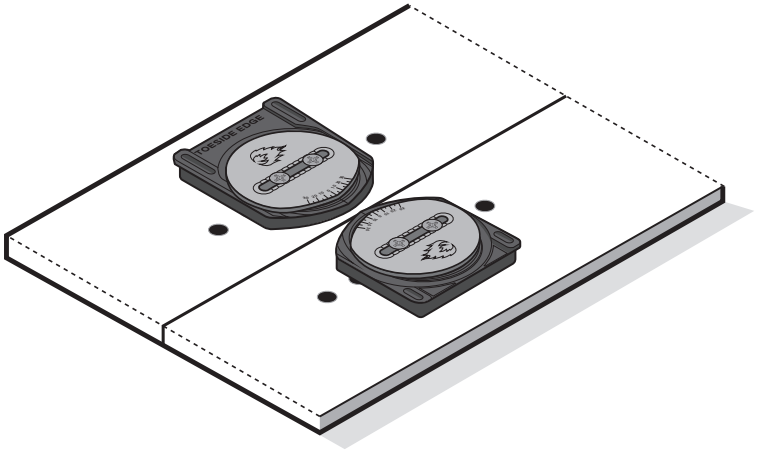

STEP 4

Flip the binding over and set on your board where you wish to attach it.

Rotate center disks until you can see the board inserts. Insert two screws through each disk and tighten a few turns.

Move binding around until it's at your preferred angle. Strap boots in to bindings to check and adjust heel toe centering.

Tighten all the puck screws.

STEP 5

Slide your binding off the pucks and remove the mini tool.

Repeat for other foot.